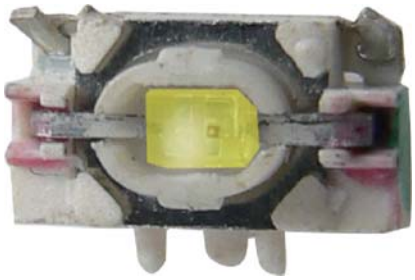

Feature -

- SPST
- mini in dimension
- bi-color LED illuminated available
- SMT, right angle, and vertical PCB terminal

Application -

- consumer products
- computer products
- instrumentation
- communication equipments

▶ SPECIFICATIONS

SWITCH SPECIFICATIONS	
POLE - POSITION	Momentary action , SPST
CONTACT RATING	MAX. : 12 V DC , 50 mA MIN. : 1 V DC , 50 μA
CONTACT RESISTANCE	500 mΩ MAX. 5 V DC ; 10 mA , by Method of Voltage DROP
INSULATION RESISTANCE	100 MΩ MIN. 100 V DC for 1 minute
DIELECTRIC STRENGTH	Breakdown is not Allowable ; 250 V AC for 1 Minute
OPERATING FORCE	160 ± 50 gf
OPERATING LIFE	100,000 cycles
OPERATING TEMPERATURE RANGE	-20°C ~ 70°C
TOTAL TRAVEL	0.2 ± 0.10 mm

LED SPECIFICATIONS						
ATTENTION (+) (-) LEDs are Electrostatic Sensitive devices		Unit	Value / LED Color			
			Blue	Green	Red	Yellow
FORWARD CURRENT	If	mA	20	20	20	20
REVERSE VOLTAGE	Vr	V	5.0	5.0	5.0	5.0
REVERSE CURRENT	Ir	μA	10	10	10	10
FORWARD VOLTAGE@20mA	Vf	V	3.5-3.8	2.0-2.5	2.0-2.5	2.0-2.5
LUMINOUS INTENSITY@20mA	Iv	mcd	45	20	80	80

■ Physical and electrical information of LED will be provided upon customer's request on switches .

▶ HOW TO ORDER

TC017L - N 1 1 A X X U B X X

OPERATION

N	NON-LOCK (std.)

POLE

1	1 POLE (std.)

POSITION

1	1 POSITION (std.)

FRAME TYPE

A	SMT TYPE
A1	DIP TYPE
A2	SMT TYPE
B	SMT TYPE (RIGHT ANGLE)
B1	DIP TYPE
C	SMT TYPE (RIGHT ANGLE)

CAP TYPE

A	A TYPE
B	B TYPE
C	C TYPE
D	D TYPE MATERIAL : PC
E	E TYPE MATERIAL : PC
F	F TYPE
G	G TYPE
H	H TYPE
I	I TYPE
J	J TYPE
X	WITHOUT

CAP COLOR

WT	Transparent white
X	WITHOUT

LED BRIGHTNESS

U	ULTRA (std.)
X	WITHOUT

LED COLOR

B	BLUE
G	GREEN
R	RED
W	WHITE
Y	YELLOW
X	WITHOUT

LED BRIGHTNESS

U	ULTRA (std.)
X	WITHOUT

LED COLOR

B	BLUE
G	GREEN
R	RED
W	WHITE
Y	YELLOW
X	WITHOUT

▶ DIMENSION

TC017L-N11AXX□□□□

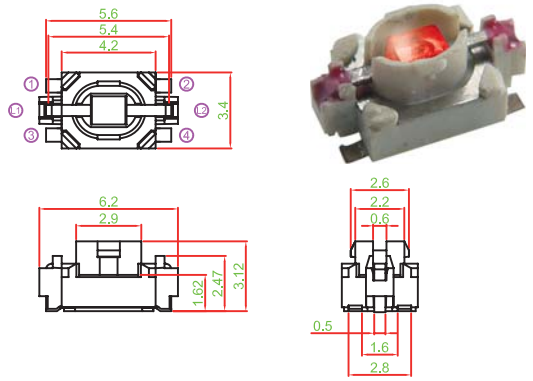

TC017L-N11A1XX□□□□

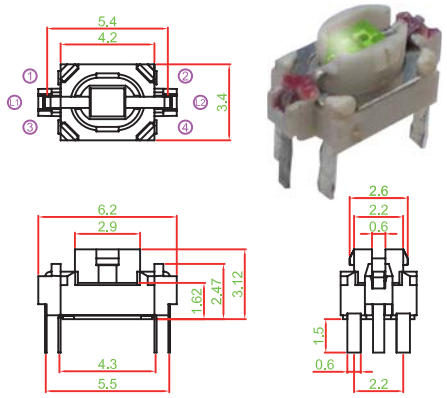

TC017L-N11A2XX□□□□

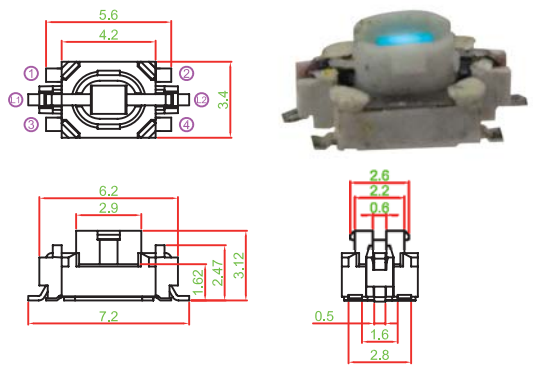

TC017L-N11CXX□□□□

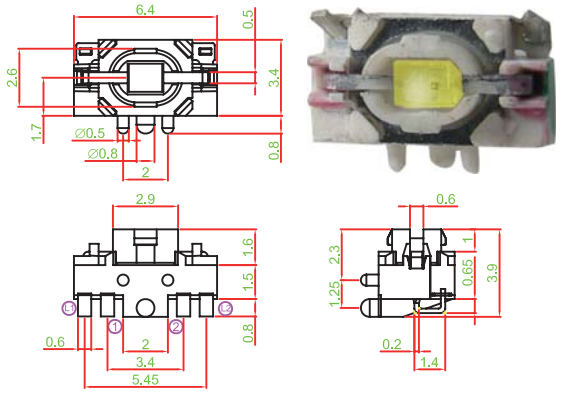

TC017L-N11BXX□□□□

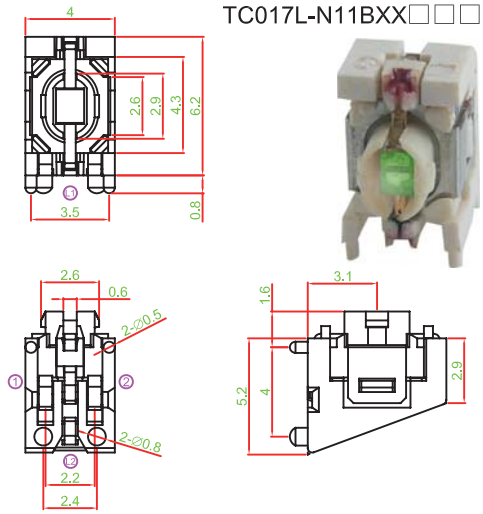

TC017L-N11B1XX□□□□

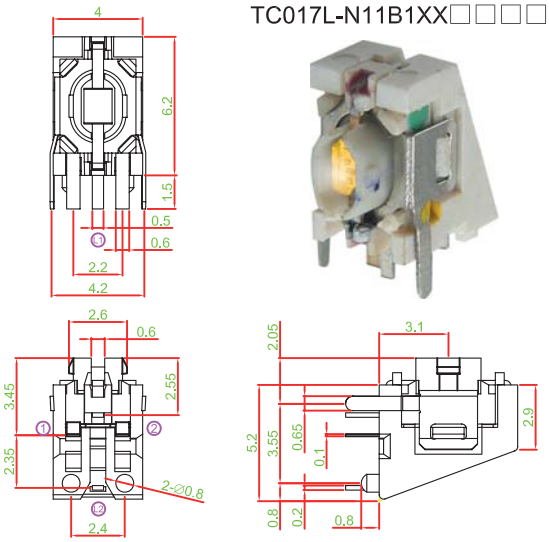

KNOB TYPE OPTION

A TYPE

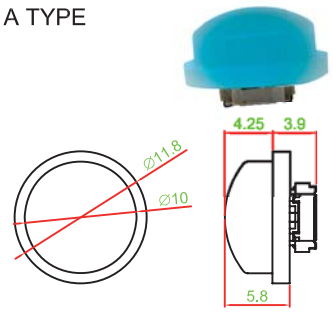

B TYPE

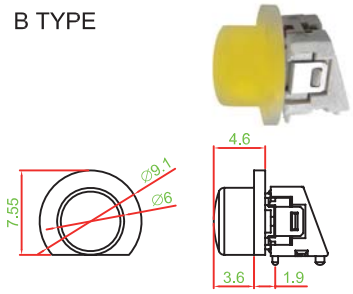

C TYPE

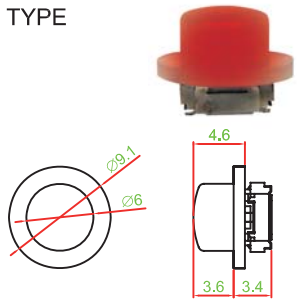

D TYPE

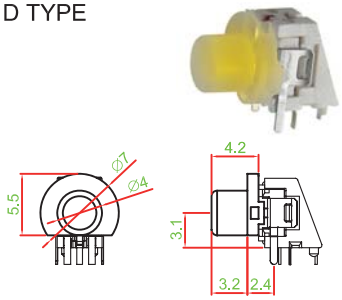

E TYPE

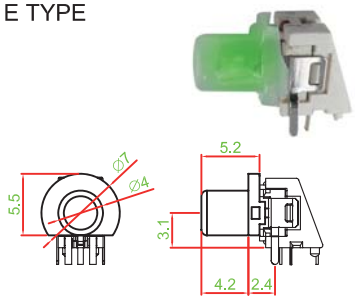

F TYPE

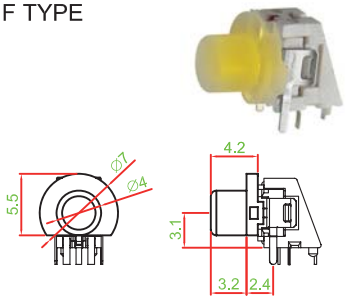

G TYPE

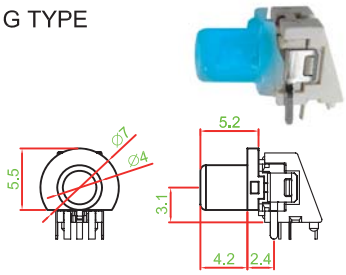

H TYPE

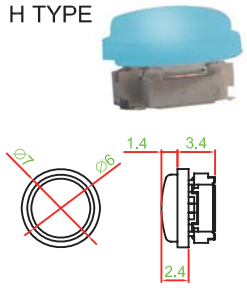

I TYPE

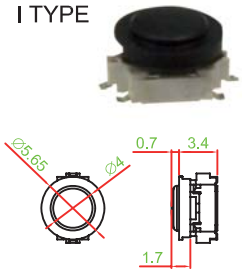

J TYPE

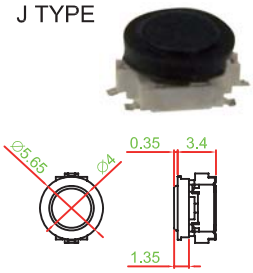

CIRCUIT DIAGRAM

FRAME : A

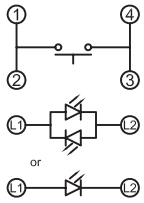

FRAME : B、C

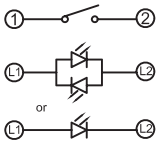

P.C.B. LAYOUT

FRAME : A

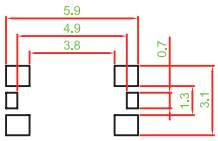

FRAME : B

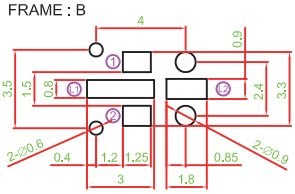

FRAME : C

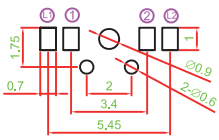

FRAME : A1

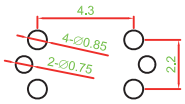

FRAME : B1

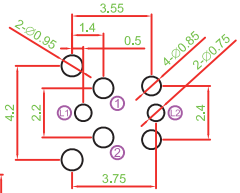

FRAME : A2

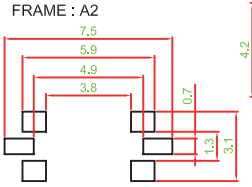

REFLOW SOLDERING

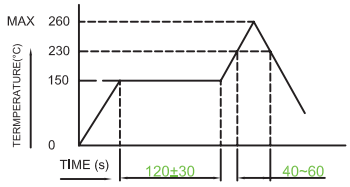

MATERIAL

- COVER : SUS
- ACTUATOR : PA
- BASE : LCP
- CAP : PC 、SILICONE
- TERMINAL : BRASS
  SILVER PLATING